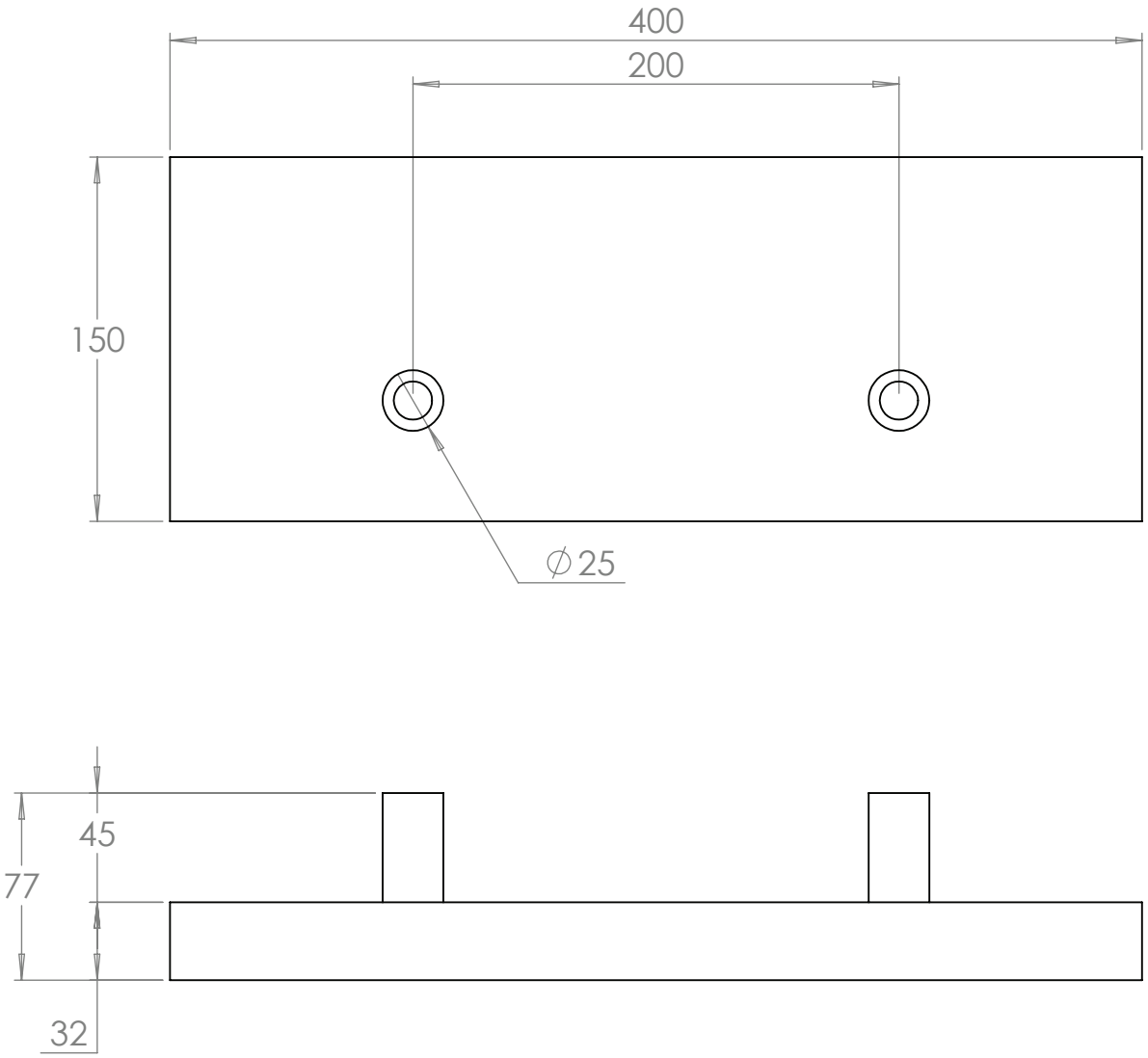

dormakaba
21 OLANDO ROAD CROMER N.S.W 2099
PHONE: + 61 2 9971 0299 FAX: + 61 2 9971 0844

DATE 16/03/2015	MATERIAL:	UNLESS OTHERWISE SPECIFIED: DIMENSIONS ARE IN MILLIMETERS	THIRD ANGLE PROJECTION	COPYRIGHT
	THICKNESS:			
	WEIGHT:	DEBUR AND BREAK SHARP EDGES	SCALE: 1:3 SHEET 1 OF 1	DRAWING #: 8545
	FINISH:			

A4