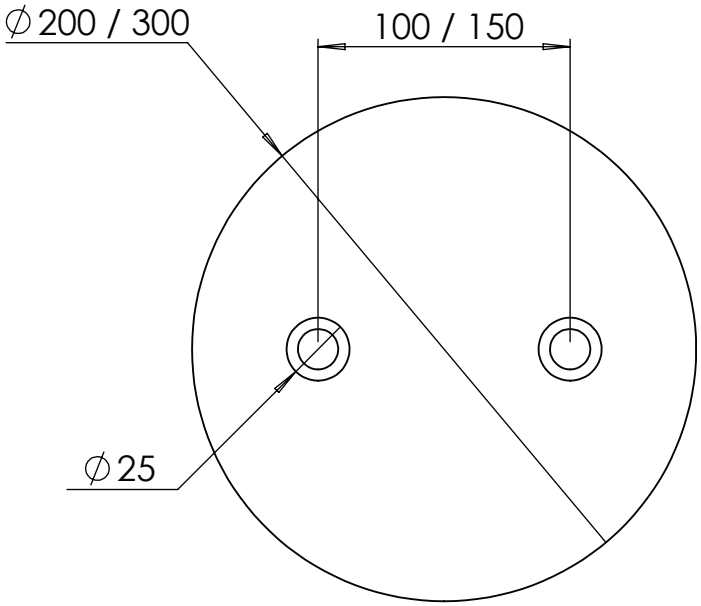

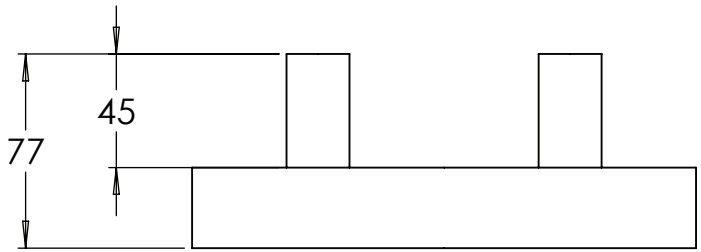

dormakaba
3/1-7 Ada Avenue BROOKVALE N.S.W 2100
PHONE: + 61 2 9939 2007 FAX: + 61 2 9939 8432

DATE 2/04/2015	MATERIAL:	UNLESS OTHERWISE SPECIFIED: DIMENSIONS ARE IN MILLIMETERS	THIRD ANGLE PROJECTION	COPYRIGHT	A4
	THICKNESS:				
	WEIGHT:	DEBUR AND BREAK SHARP EDGES	SCALE: 1:3 SHEET 1 OF 1	DRAWING #: 8550	
	FINISH:				